Spacecraft Avionics: Architectures and Buses

CEC 300: Computing in Aviation and Aerospace

Authors: Richard S. Stansbury

EMBRY-RIDDLE
Aeronautical University

Overview

- Introduction
- Spacecraft Architectures
  - Federated
  - Integrated Modular Avionics
  - Distributed Integrated Modular Avionics (DIMA)
  - Space Plug-and-Play Avionics (SPA)
  - Space Avionics Open Interface Architecture (SAVOIR)
  - Open Modular Avionics Architecture for Space Applications (OMAC4S)
- Buses
  - SpaceWire, SpaceFibre
  - MIL-STD-1553
  - Controller Area Network (CAN)
  - Time-Triggered Ethernet (TTE)
- Onboard Computers (OBC)
- Examples

SPACECRAFT ARCHITECTURES

From Air to Vacuum – Space Avionics

- **Definition:**
  - The spacecraft "brain" and "nervous system," responsible for Command & Data Handling (C&DH), Guidance, Navigation & Control (GNC), and Payload Management.

- **The Paradigm Shift:**
  - Moving from single-unit spacecraft to networked constellations and space-based cloud computing.

- **Core Difference:**
  - Aircraft avionics: maintainable, atmosphere-cooled),
  - Spacecraft avionics: autonomous, radiation-hardened, and thermally managed in a vacuum.

Hostile Environment – Radiation and Reliability

System Faults Due To Radiation

- **Total Ionizing Dose (TID):**
  - Cumulative damage resulting in a graduate degradation.
- **Single Event Effects (SEE):**
  - See Figure

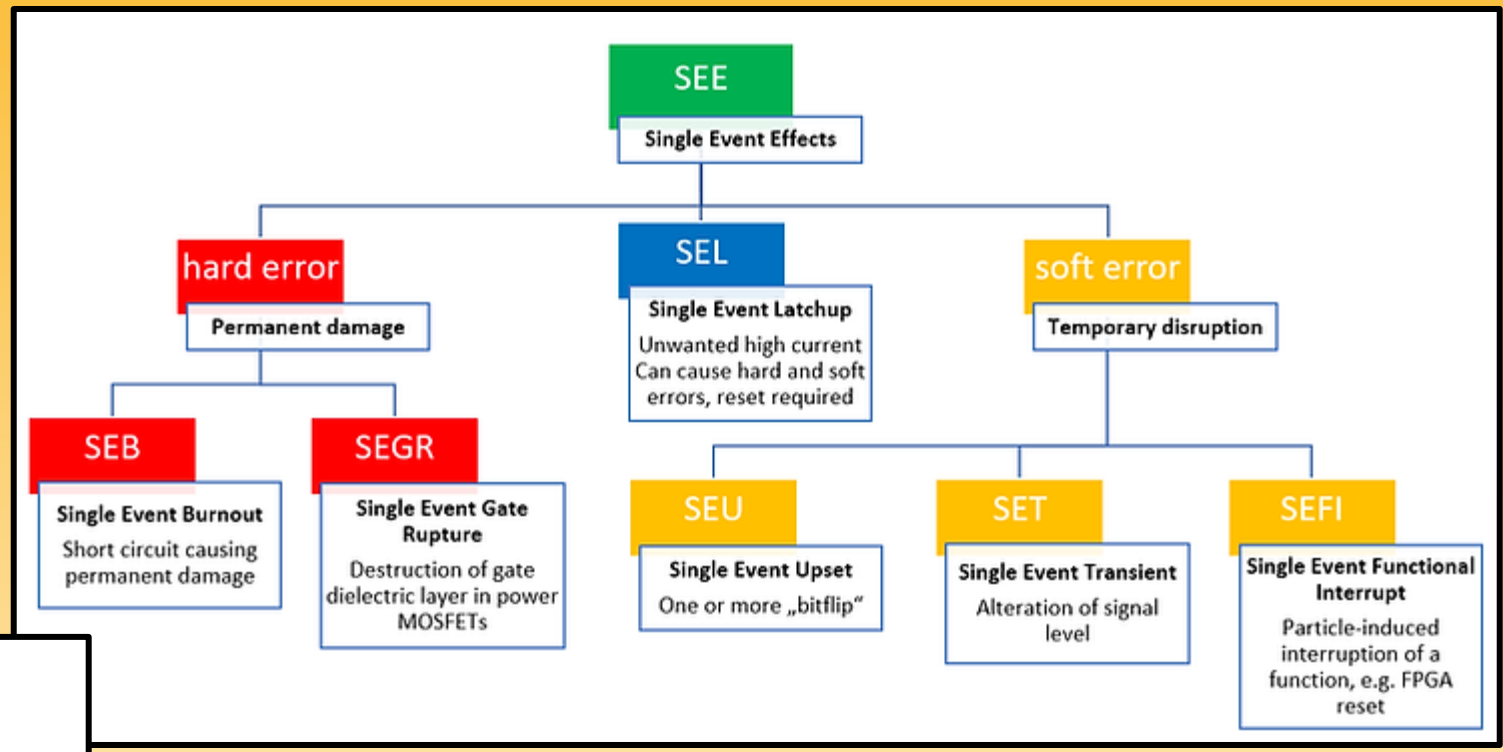

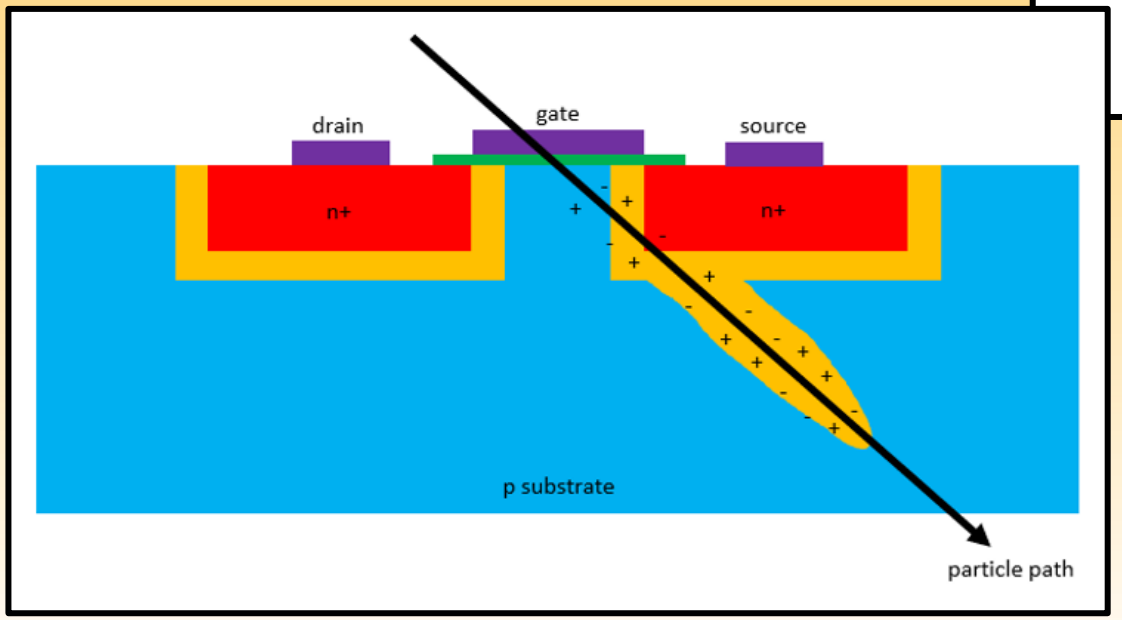

Mitigation Strategies

- **Testing** to determine the current and voltage thresholds and tolerance for components.
- **Hardware:** redundant systems (e.g. triple modular redundancy (TMR), scrubbing, and watchdogs.
- **Physical:** shielding, RAD hardening

EMBRY-RIDDLE Aeronautical University

Evolution of Architecture

- **Federated Architecture**
  - Each function has its own integrated box with its own computing resources.

- **Integrated Modular Avionics (IMA)**
  - Functions operating on shared computing resources; leverages generic computing platforms.

- **Distributed Integrated Modular Avionics (DIMA)**
  - Network nodes are physically distributed, but functions are logically integrated.
  - Less cables.
  - Functions can be distributed within a spacecraft.
  - Processing distributed

COMPARISON OF IMA AND DIMA

Feature	IMA	DIMA
Physical layout	Centralized	Distributed
Primary Goal	Resource sharing (Swap reduction)	Flexibility and Scalibility
Cable weight	Low (vs. Federated)	Very Low
Fault isolation	Logical Partitioning	Physical & Logical Partitioning
Upgradeability	Moderate	High

Federated Architecture (classical approach)

- A **"One Function, One Box"** approach. Subsystems (AOCS, Thermal, Power) are physically and functionally distinct.

- **Topology:**
  - Typically bus or Star topology
  - Connects remote terminals to centralized processing

- **Resource Allocation:**
  - RTs have exclusive processor, I/O, and drivers
  - Resources are not shared between subsystems.

Integrated Modular Avionics (Centralized)

- Functions are combined to operate on shared computing resources.
- Instead of dedicated processors per function, processing units now interact with multiple functions that are isolated through software partitions.
- Use a **Data Interface Unit (DIU)** or **Remote Interface Unit (RIU)** for data gathering from sensors but processed centrally.
- IMA has high functional density resulting in a reduction in the size, weight, and power requirements of the avionics system.

Distributed Integrated Modular Avionics (DIMA)

- Combines the functional integration of IMA with physical distribution
- Computing nodes are distributed near sensors/actuators on standardized software tasks.
- Example:
  - Sensor processing on a processing node that leverages a high-speed backbone to exchange information.
- Real world:
  - NASA Lunar Gateway

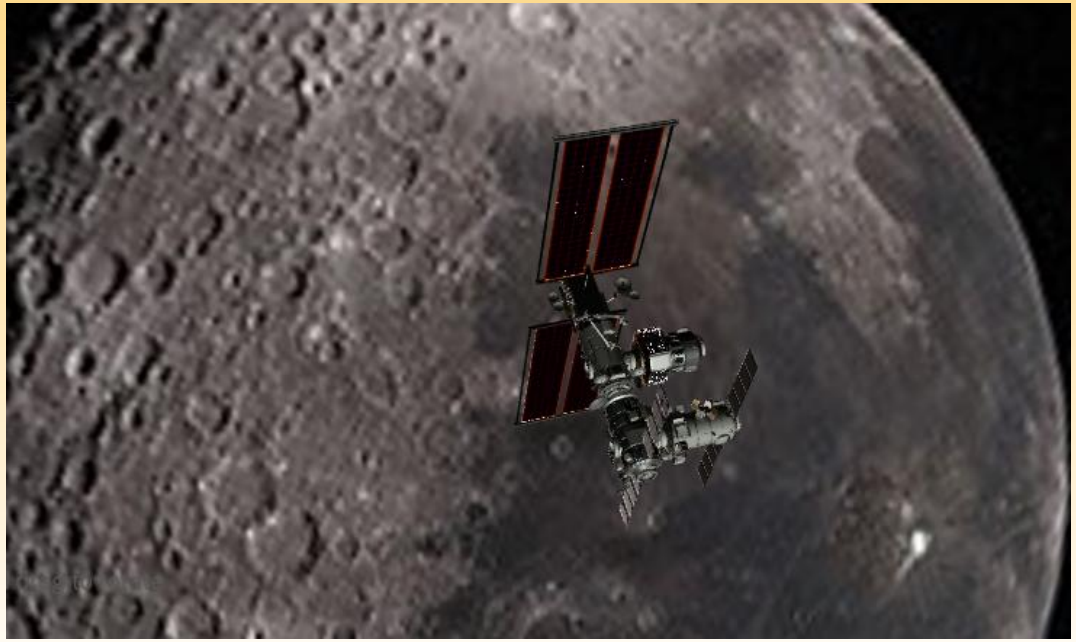

EMBRY-RIDDLE Aeronautical University

DIMA Architecture for Lunar Gateway

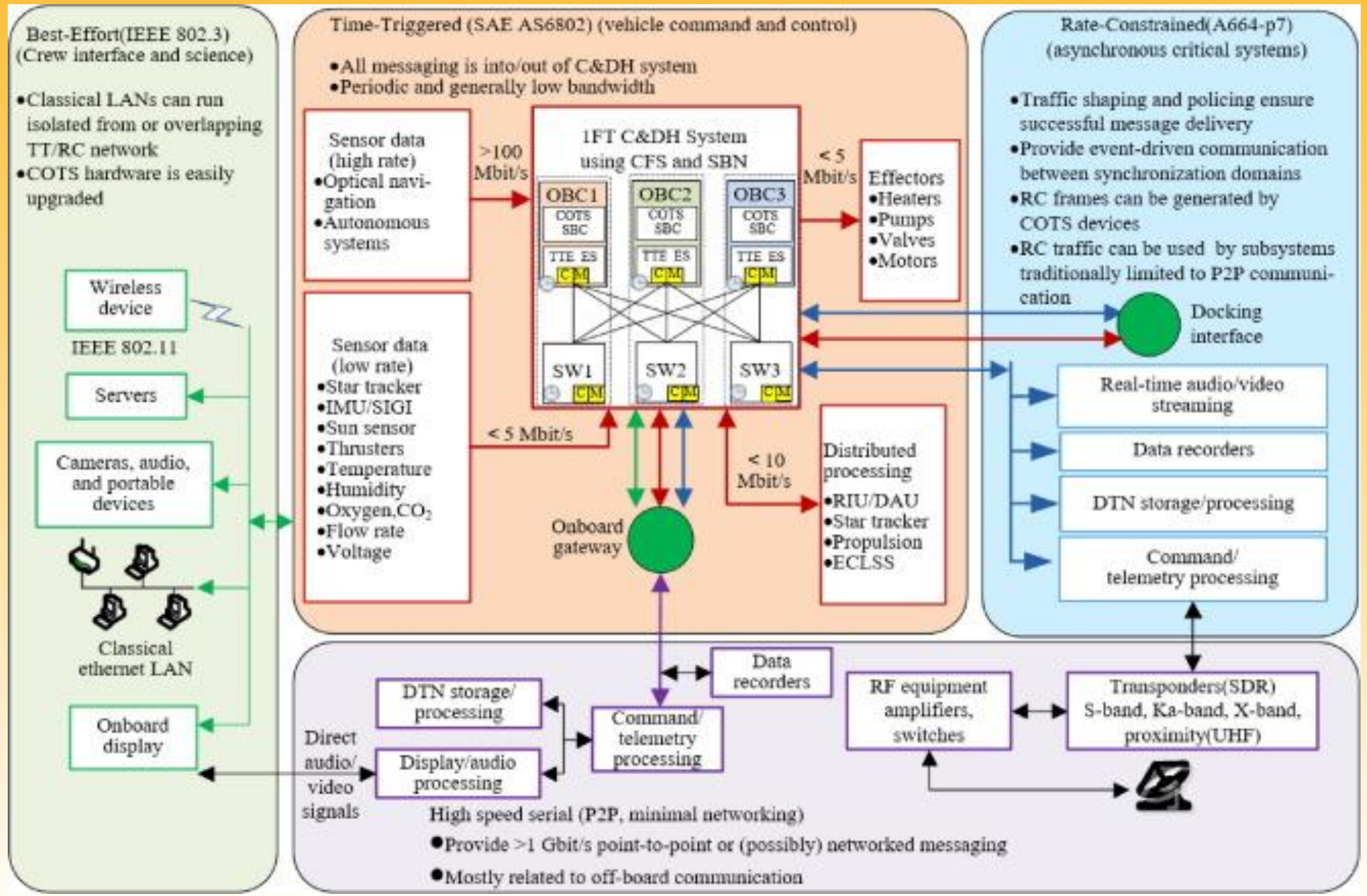

EMBRY-RIDDLE Aeronautical University

Open Architectures

- **SAVOIR (ESA)** – *Space Avionics Open Interface Architecture*
  - Aims for interoperability and standardized interfaces permitting integration of components from multiple vendors.
- **SPA (US AFRL)** – *Space Plug-and-play Avionics*
  - Modelled after USB enabling rapid detection and configuration of components.
  - Leverages self-organizing networks
- **OMAC4S**
  - Approach is like IMA, but uses a commercial backplane standard.

SAVOIR

- **Definition:**
  - An open reference architecture for spacecraft avionics systems developed by ESA.
  - Standardizes hardware and software platforms, modules, and internal/external interfaces.

- **Hardware Interconnectivity:**
  - Standardized communication protocol
    - CCSDS (Consultative Committee for Space Data Systems)
    - ECSS (European Cooperation for Space Standardization)
  - Leverages standard buses such as MIL-STD-1553B, SpaceWire, and Time-Triggered Ethernet.

- **Software Architecture**
  - Layered software architecture
  - Time-space partitioning operating system
    - Application Software
    - Execution platform – runs the services enabling application software

Design Tradeoffs

- **Interoperability**
  - Most applicable to large, complex missions supported by multiple collaborators.
  - Enables reusability.
  - Decreases spacecraft design time.

- **Integration Complexity**
  - Each system must be assessed to ensure compliance with the standards used.

SAVOIR Architecture

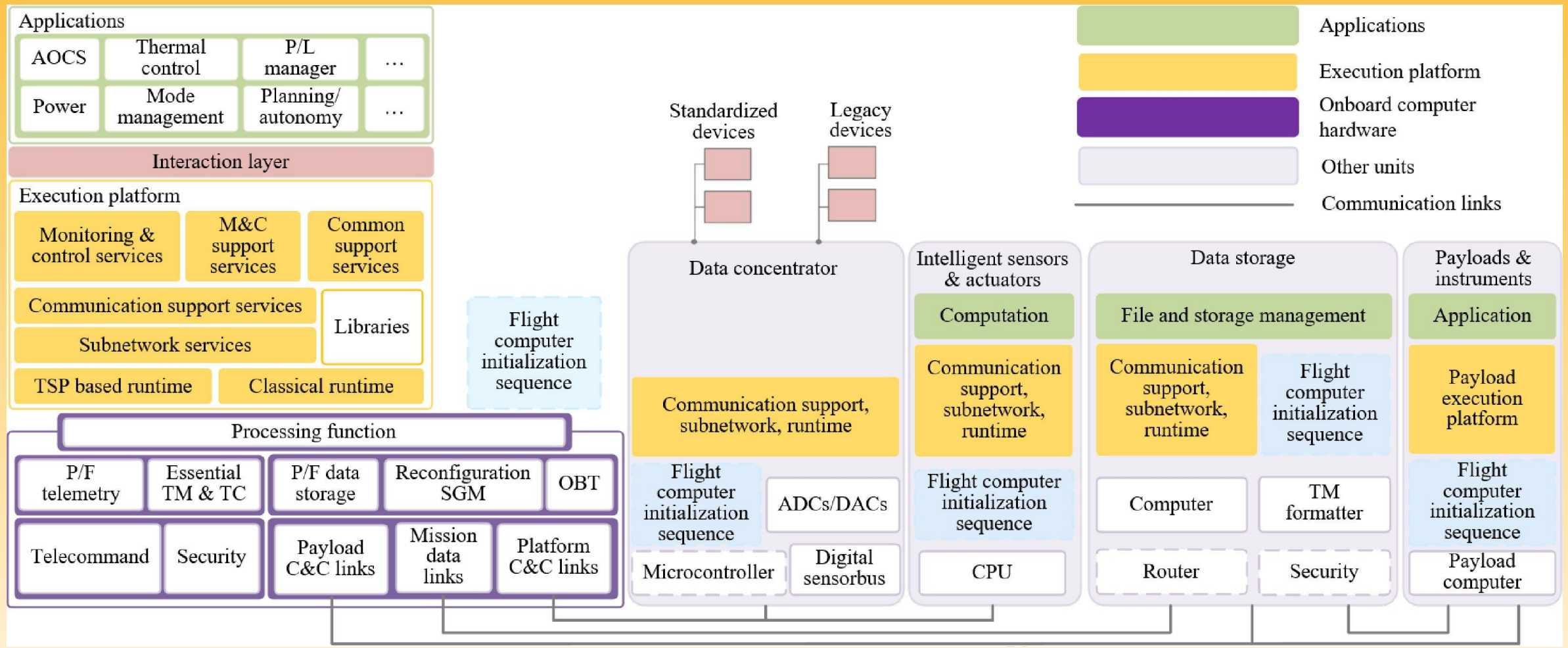

EMBRY-RIDDLE Aeronautical University

SPA

- **Open architecture** proposed in 2024 by the US Air Force Research Laboratory.
  - Enables spacecraft to swiftly respond to mission needs (i.e. rapid integration, maintenance, test, etc.).
- **Approach:**
  - Like terrestrial USB interface
  - Self-organizing network
  - **Plug-and-play middleware**
    - Divided into different **managers**: data, task, processor, and sensor managers
  - **Interface Unification**
    - Unification of mechanical, electrical, and thermal interfaces across spacecraft.
    - Enable rapid production, assembly, test, and maintenance.
  - **Topology**
    - Dual-star topology with routers/switches as “data exchange centers” and plug-and-play nodes
      - Unified interfaces
      - High-bandwidth

Design Tradeoffs

- Rapid assembly – enables self-style assembly, hot-plugging and simplified maintenance or upgrades.
- Initial design complexity – must automate verification and validation to ensure compatibility and reliability.
  - Must integrate a variety of disparate systems.

EMBRY-RIDDLE Aeronautical University

SPA Architecture

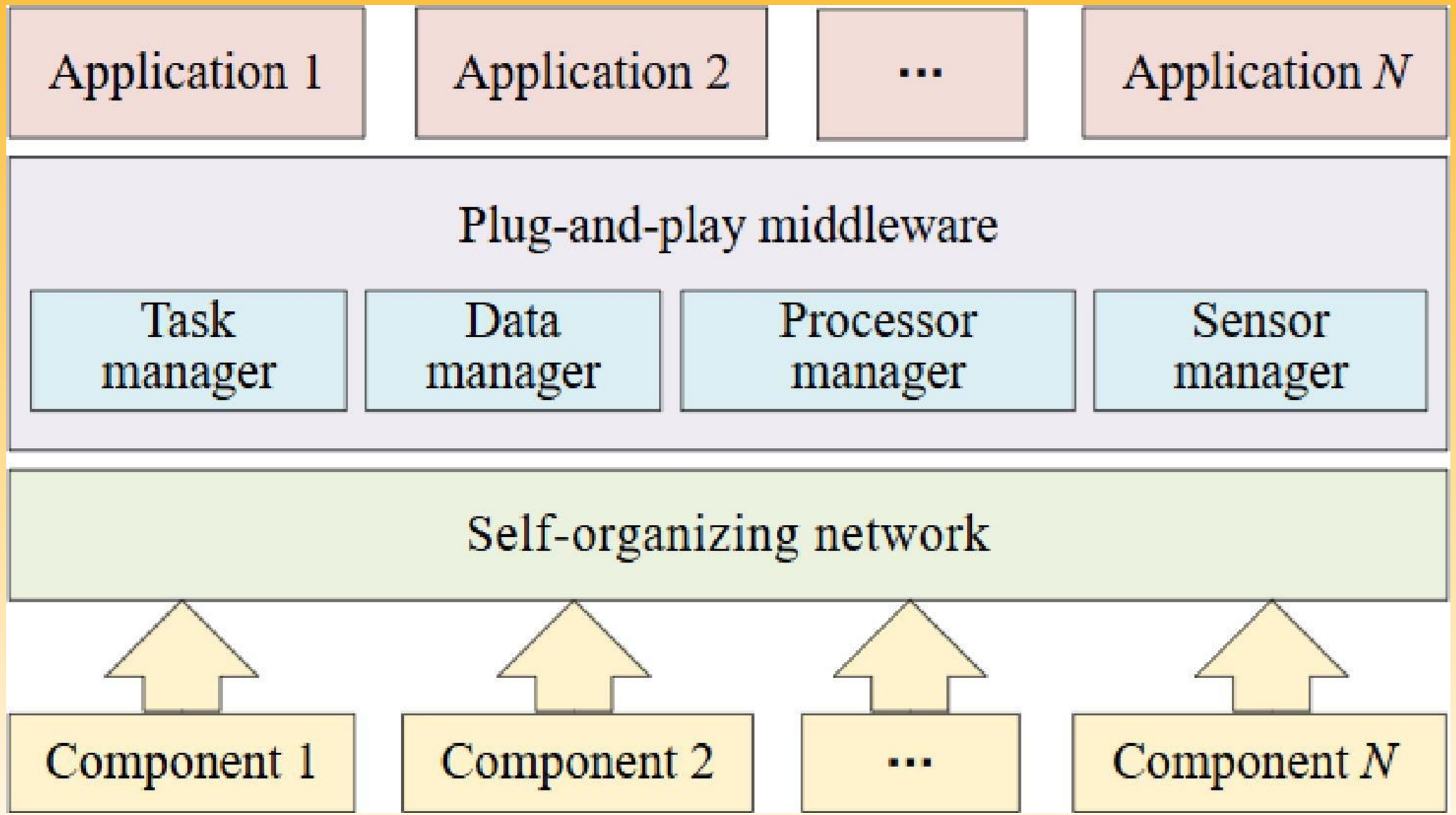

OMAC4S

- **Origin:**
  - Initiated in 2013 by Airbus, TTTech, and additional partners.
- **Purpose:**
  - Reduce cost and complexity of hardware/software system
  - Combat obsolescence in aviation electronic systems
- **Approach**
  - Line Replaceable Units integrated into a commercial backplane such as CPCI-E.
    - Replace faulty hardware
    - Upgrade obsolete / discontinued hardware
  - Time-triggered Ethernet (TTE) serves as the network backbone *(more on TTE later)*.
- **Tradeoffs**
  - **Maintainability** – highly modular with LRU's enabling fast replacement of faulty or obsolete hardware, which lowers maintenance and upgrade costs.
  - **Interaction Complexity** – while LRUs are simple, their integration is complex governed by the system's software and TTE network.

EMBRY-RIDDLE Aeronautical University

OMAC4S Architecture

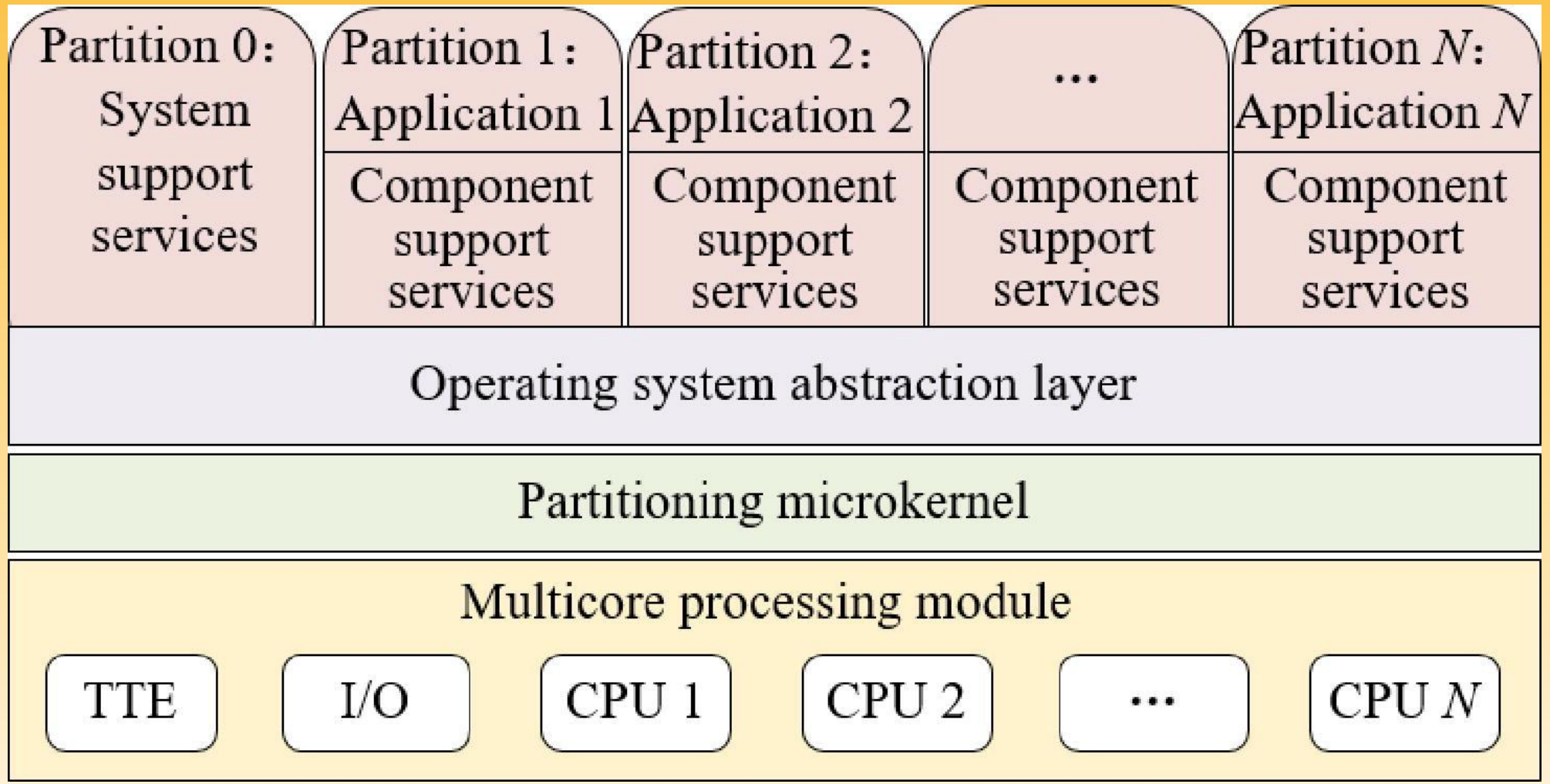

EMBRY-RIDDLE Aeronautical University

DATABUSES

Databus – Backbone of Satellite Avionics Architectures

Low-speed & Control Buses

- **MIL-STD-1553B:**
  - **Legacy standard, command/response protocol, reliable, but slow and heavy.**
- **CAN Bus (Controller Area Network):** Adapted from automotive. Differential signaling which handles noise mitigation, multi-master, lightweight.
- **RS-485:** Simple, differential, high throughput for short distances, but no built-in error handling protocol.

High-speed

- **SpaceWire / SpaceFibre**
  - High-speed, point-to-point (switched), full-duplex, 2-400Mbps
- **TTEthernet (Time-Triggered Ethernet)**
  - Mixed-criticality ethernet network, built from IEEE 802.3 Ethernet standard with synchronized data slots.

Legacy – MIL-STD-1553B

- **Bus:**
  - Linear bus with Bus Controller

- **Protocol: Command/Response**
  - Bus Controller polls remote terminals.
  - Remote terminals only communicate to respond to commands from the bus controller.

- **Performance:**
  - Up to 1 Mbps
  - Half-duplex

- **Tradeoffs**
  - Heavy cabling
  - Low bandwidth
  - Deterministic
  - reliable

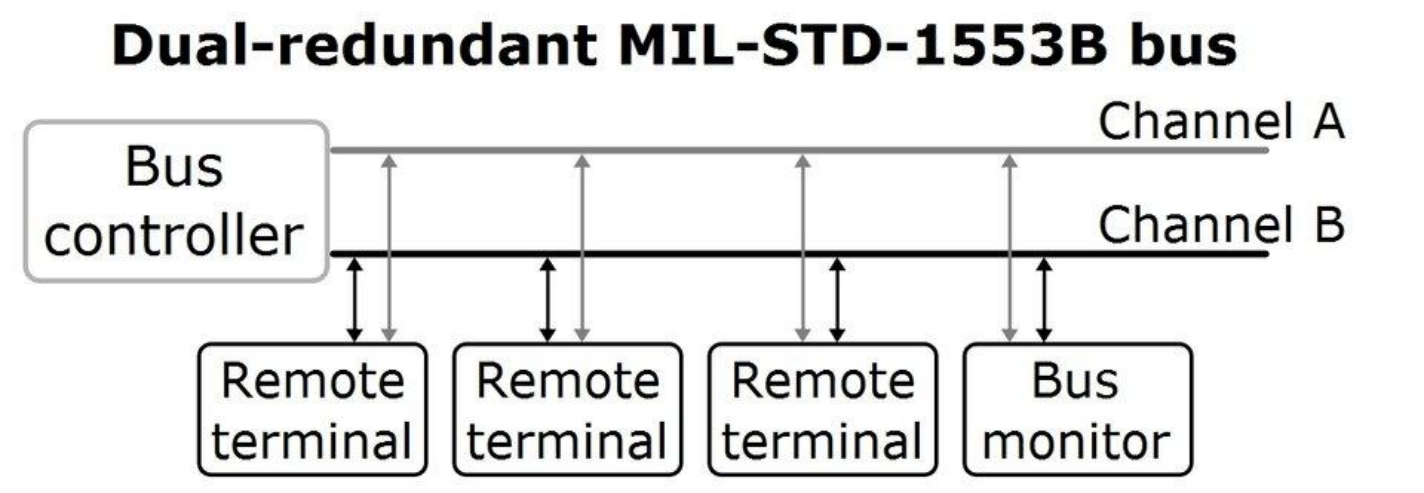

EMBRY-RIDDLE Aeronautical University

Controller Area Network (CAN) Bus

- Lighter than MIL-STD-1553b bus, often used in small sats including cubesat.

- **Topology:**
  - Linear with differential signaling
  - Differential signaling provides noise immunity.

- **Protocol:**
  - Multi-master, event triggered
  - CSMA/CD + AMP for arbitration

- **Performance:**
  - Up to 1Mbps (classical)
  - Up to 5Mbps (CAN-FD)

- **Tradeoffs:**
  - Low SWaP, simple wiring
  - High overhead limits throughput to only 40%

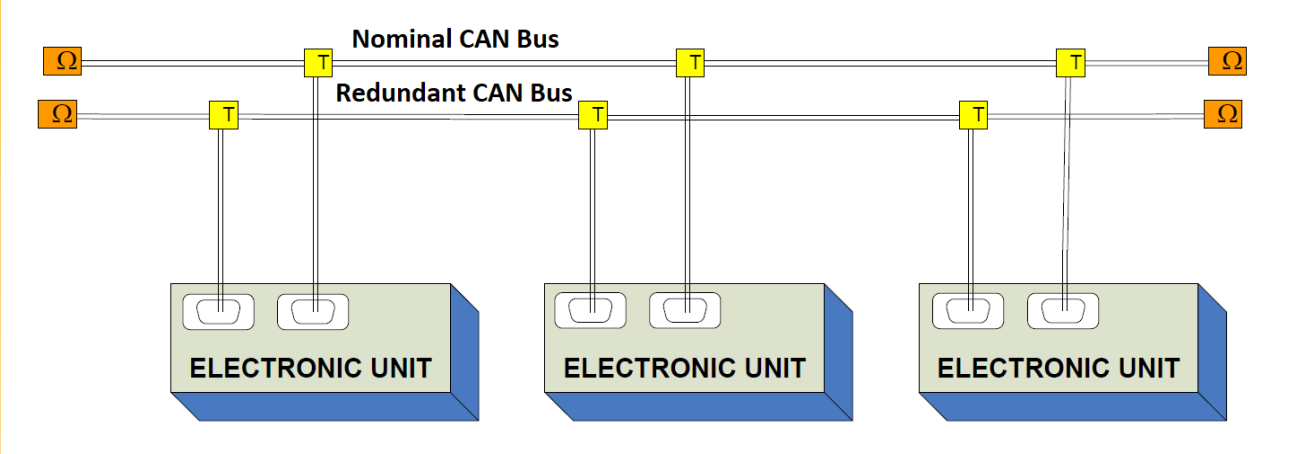

SpaceWire and SpaceFibre

- Full-duplex with flow control w/ SpaceFibre being the next-generation successor to SpaceWire.
- **Topology:**
  - Network, not bus
  - Switched Fabric / Point-to-Point
- **Protocols:**
  - "Worm hole" routing – packets forwarded to destination before the entire message is received.
- **Performance:**
  - ***SpaceWire*** – 2-400 Mbps
  - ***SpaceFibre*** – up to 6.25 Gbps, longer cable distances, maintains quality of service, and built in fault detection isolation and recovery (FDIR)
- **Applications**
  - James Webb Space Telescope (SpaceWire)
  - Supports remote sensing where each orbit can produce terabytes of data
    - E.g. Synesthetic Aperture Radar (SAR) or hyperspectral imaging.

EMBRY-RIDDLE Aeronautical University

SpaceWire Example – Arase Spacecraft Architecture

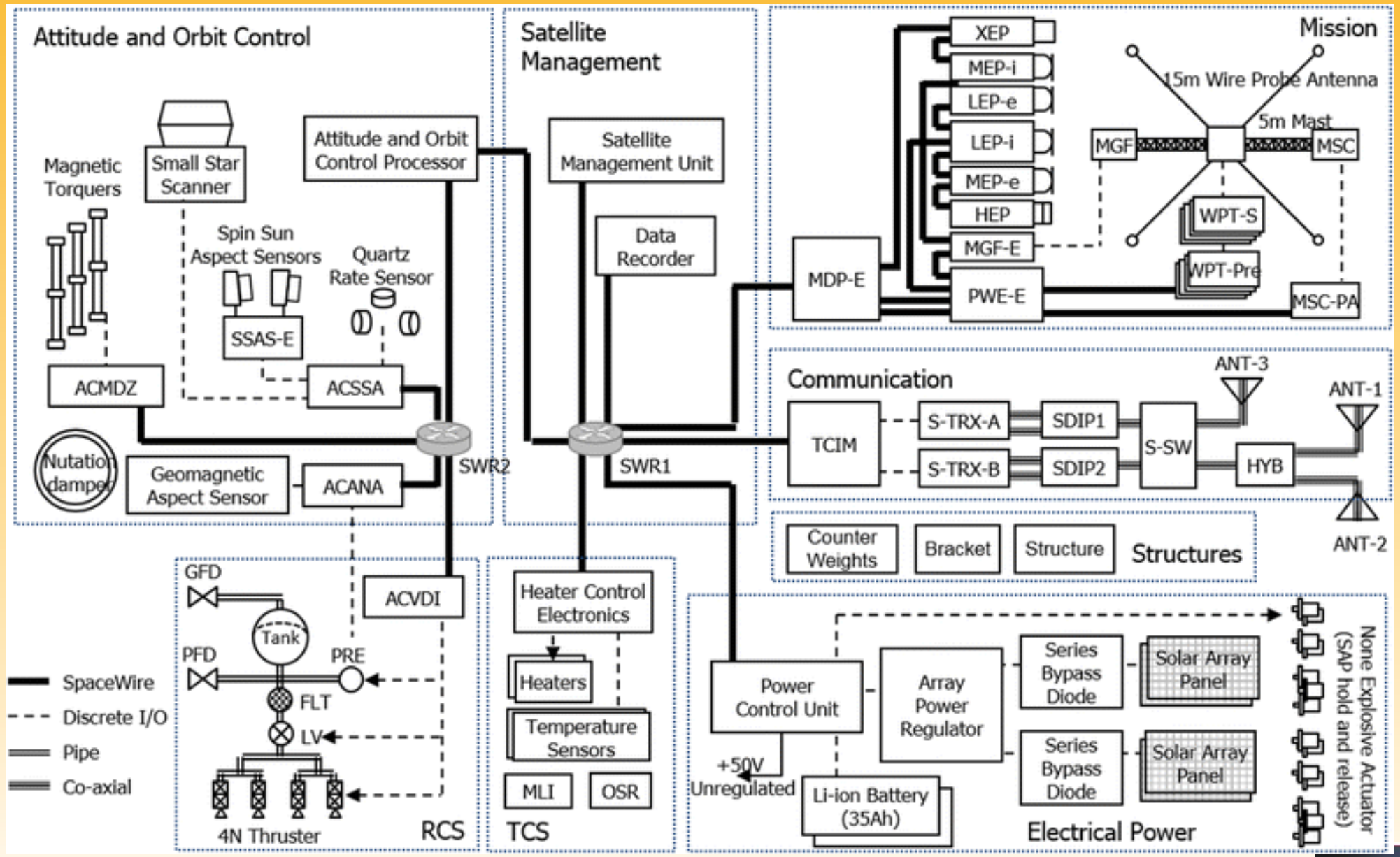

Figure 2 | Design of a mission network system using SpaceWire for scientific payloads onboard the Arase spacecraft | Earth, Planets and Space | Springer Nature Link

EMBRY-RIDDLE Aeronautical University

SpaceFibre Architecture

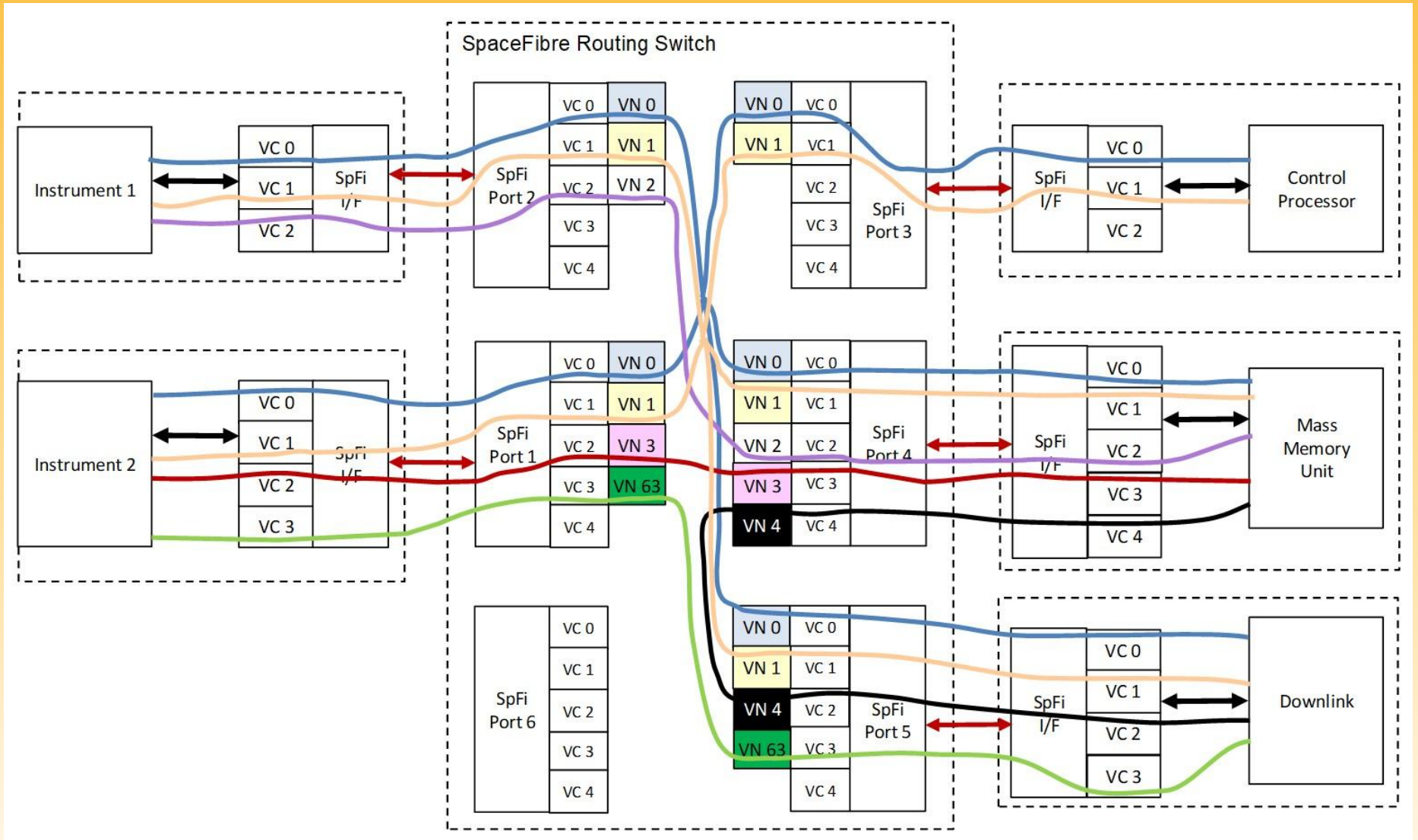

SpaceFibre Networks - STAR-Dundee

EMBRY-RIDDLE Aeronautical University

Time-Triggered Ethernet (TTE)

- Multiple types of data on the network:
  - **Time-Triggered:** critical control commands, guaranteed bandwidth
  - **Rate-Constrained:** Audio/Video streams, guaranteed bandwidth
  - **Best-Effort:** file transfers, no guarantee on bandwidth

- Enables the combination of command/control communications and payload communications on a common network.

- Real-World Example
  - ***Orion Spacecraft***

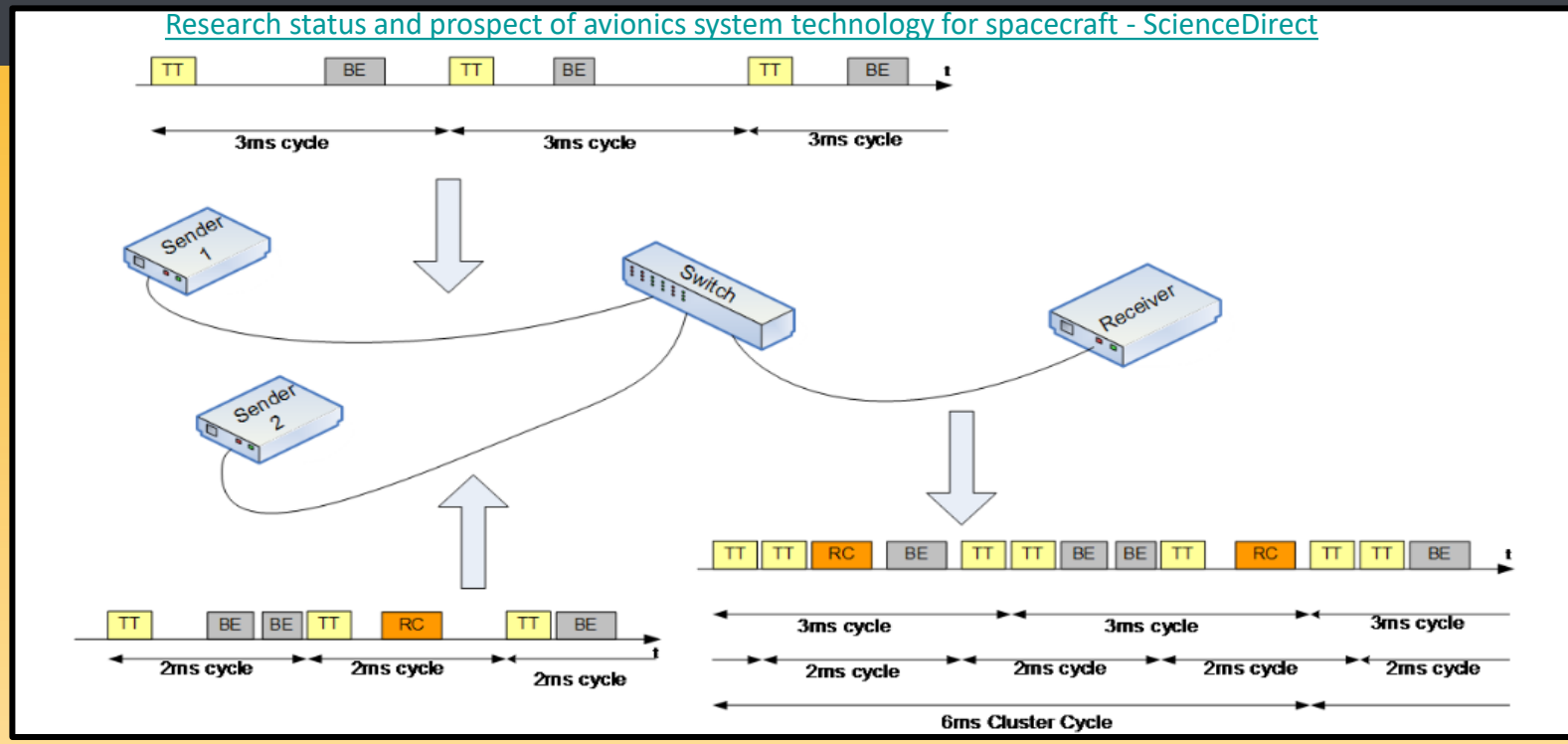

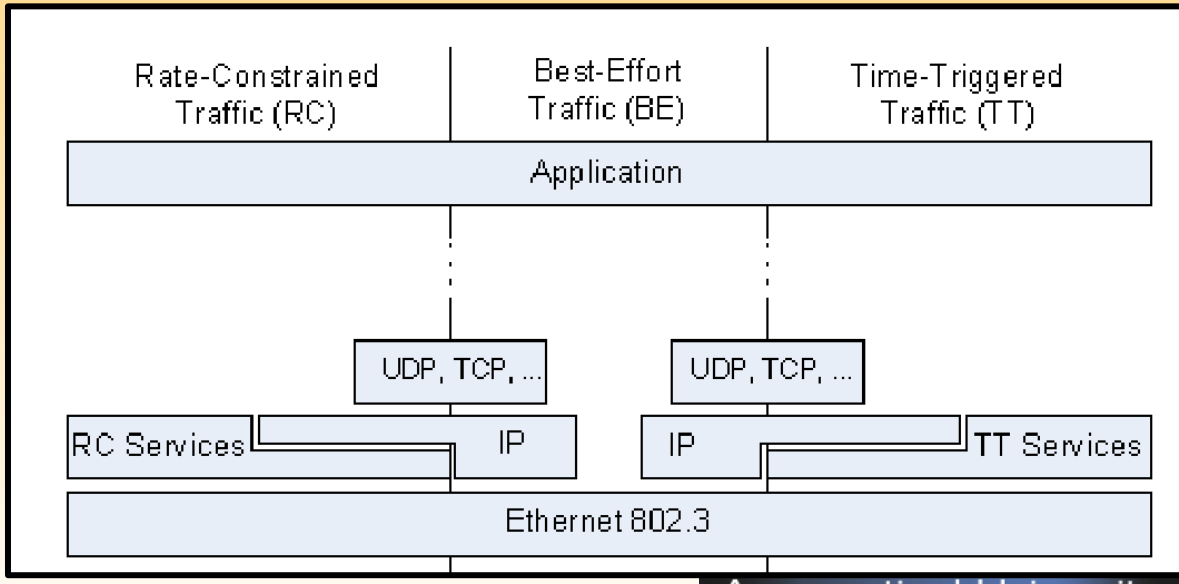

Lunar Gateway – DIMA with TTE Networking

Onboard Computing

- **Rad-Hard Processors:**
  - Pro: immunity to radiation
  - Con: expensive and significantly lower performance compared to modern systems
  - e.g. RAD750, LEON

- **Commercial off-the-shelf (COTS) Processors:**
  - Pro: High performance, cheap, low power
  - Con: Susceptible to radiation.
  - e.g. ARM Cortex, Snapdragon
  - Real-world: Ingenuity Mars Helicopter – uses Snapdragon for computing power to enable autonomous flight controls without any radiation hardening.

- **Hybrid/Heterogeneous Computing:**
  - Combination of COTS with RAD-HARD reliability
  - e.g. NASA SpaceCube – fast FPGA with rad-tolerant supervisor

Software & Autonomy

- **Software-Defined Systems:** Decoupling hardware from software. Reconfigurable radios (SDR) and satellites.

- **FDIR (Fault Detection, Isolation, and Recovery):** Hierarchical autonomy (Device -> Subsystem -> System -> Safe Mode).
  - Layered Approach:
    - **Device Level:** A memory bit flips? EDAC corrects it.
    - **Subsystem Level:** A star tracker freezes? The computer switches to the backup.
    - **System Level**: The battery is dying? The satellite autonomously enters 'Safe Mode,' pointing solar panels at the sun and shutting down non-essentials.

- **Autonomy Levels:** From simple survival (power/thermal) to autonomous scientific discovery (filtering data onboard).

Examples of reconfigurable test platforms:

- **ESA OPS-SAT:** A "flying laboratory" that allows the upload of new software apps in orbit to test novel communication protocols.

- **SmartSat:** Lockheed Martin's architecture allowing satellites to be reconfigured like smartphones.

EMBRY-RIDDLE Aeronautical University

System Integration and Test for Orion Crew Capsule

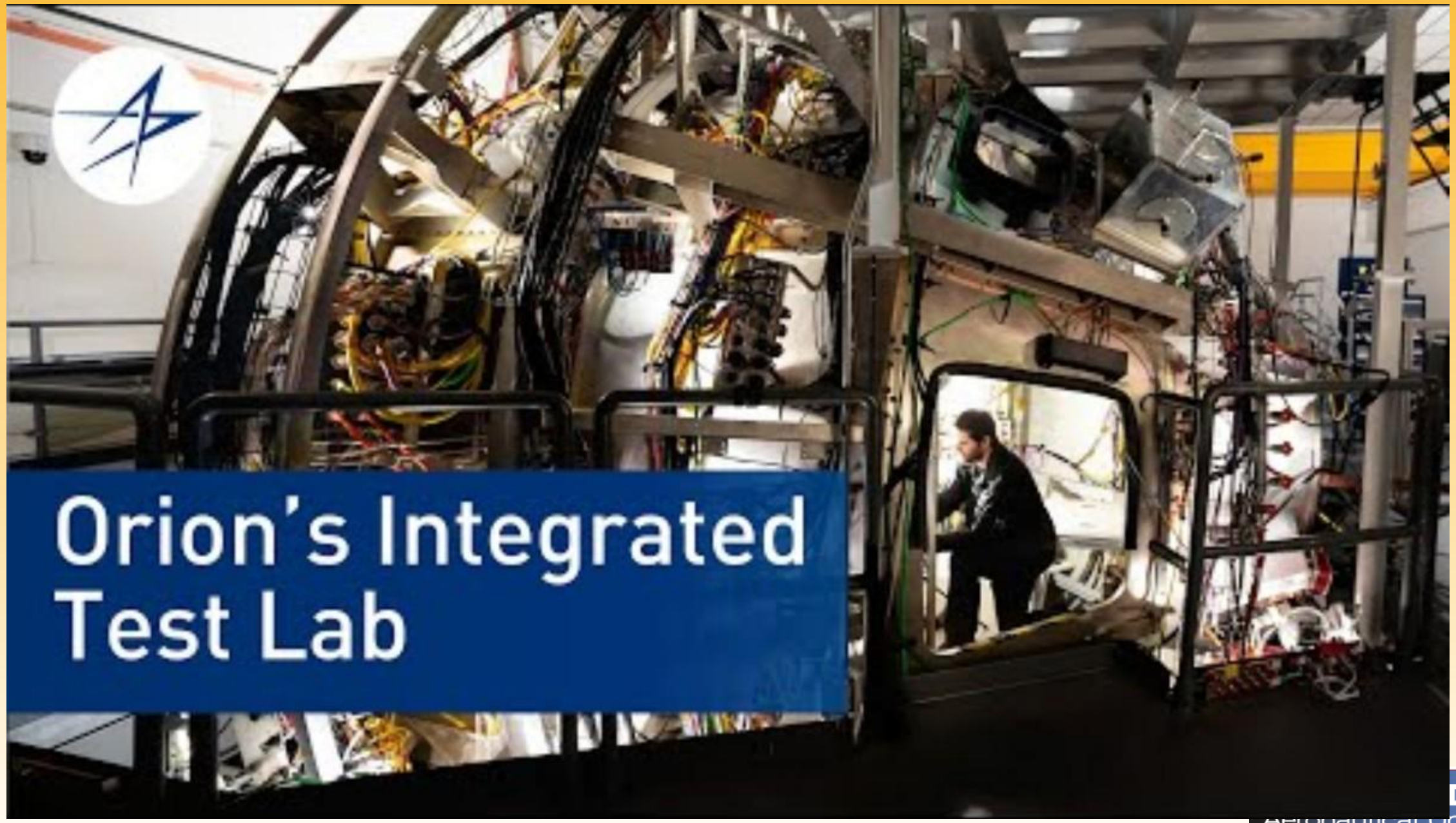

Where are we going?

- **Mega-Constellations:** Shift from "Handcrafted" to "Batch Production" (Automotive manufacturing techniques).
- **Inter-Satellite Links (ISL):** Lasers/RF connecting satellites to form a space-based internet (Space mesh networks).
- **Cloud-Edge Collaboration:** Satellites act as "Edge" nodes, processing data before sending only insights to the ground cloud.

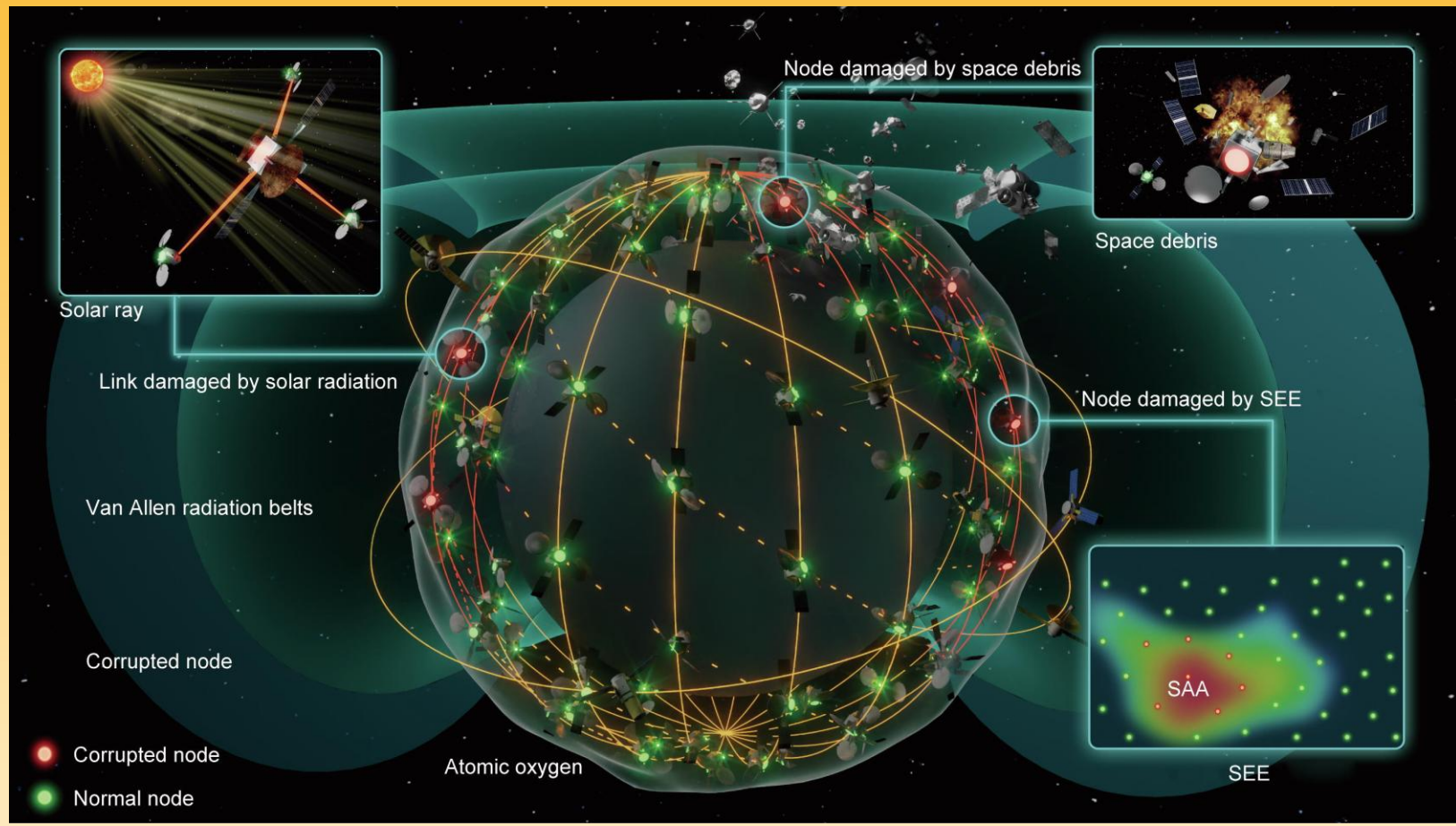

Effects of Space Environment on Satellite Mega-Constellations: From Nodes and Links to Network Performance - ScienceDirect

EMBRY-RIDDLE Aeronautical University

Wrapping Up

Last Time:

Learned about MIL-STD-1553 a bus-based avionics architecture.

This Unit

Addresses the AFDX/ARINC 664 Standard created by Airbus, which utilizes ethernet and time-division multiplexing.

Coming up:

Discussion of space-based databuses and architectures.

What parts of aviation and space databuses are common and what are different given the application type?

Questions?

EMBRY-RIDDLE
Aeronautical University

Module References

- C. CHEN, Y. YIN, K. HUANG, X. HE, Research status and prospect of avionics *system technology for spacecraft, Chinese Journal of Aeronautics (2025), doi: https://doi.org/10.1016/j.cja.* 2025.104048

- A. Cratere, L. Gagliardi, G. A. Sanca, F. Golmar, and F. Dell'Olio, "On-Board Computer for CubeSats: State-of-the-Art and Future Trends," IEEE Access, July 2024. DOI: 10.1109/ACCESS.2024.3428388

- L. Jiang and P. Xu, "Onboard Avionics in the New Space Era: Present and Future," Journal of Aerospace Information Systems, Vol. 21, No. 9, September 2024. DOI: https://doi.org/10.2514/1.I011326

EMBRY-RIDDLE Aeronautical University